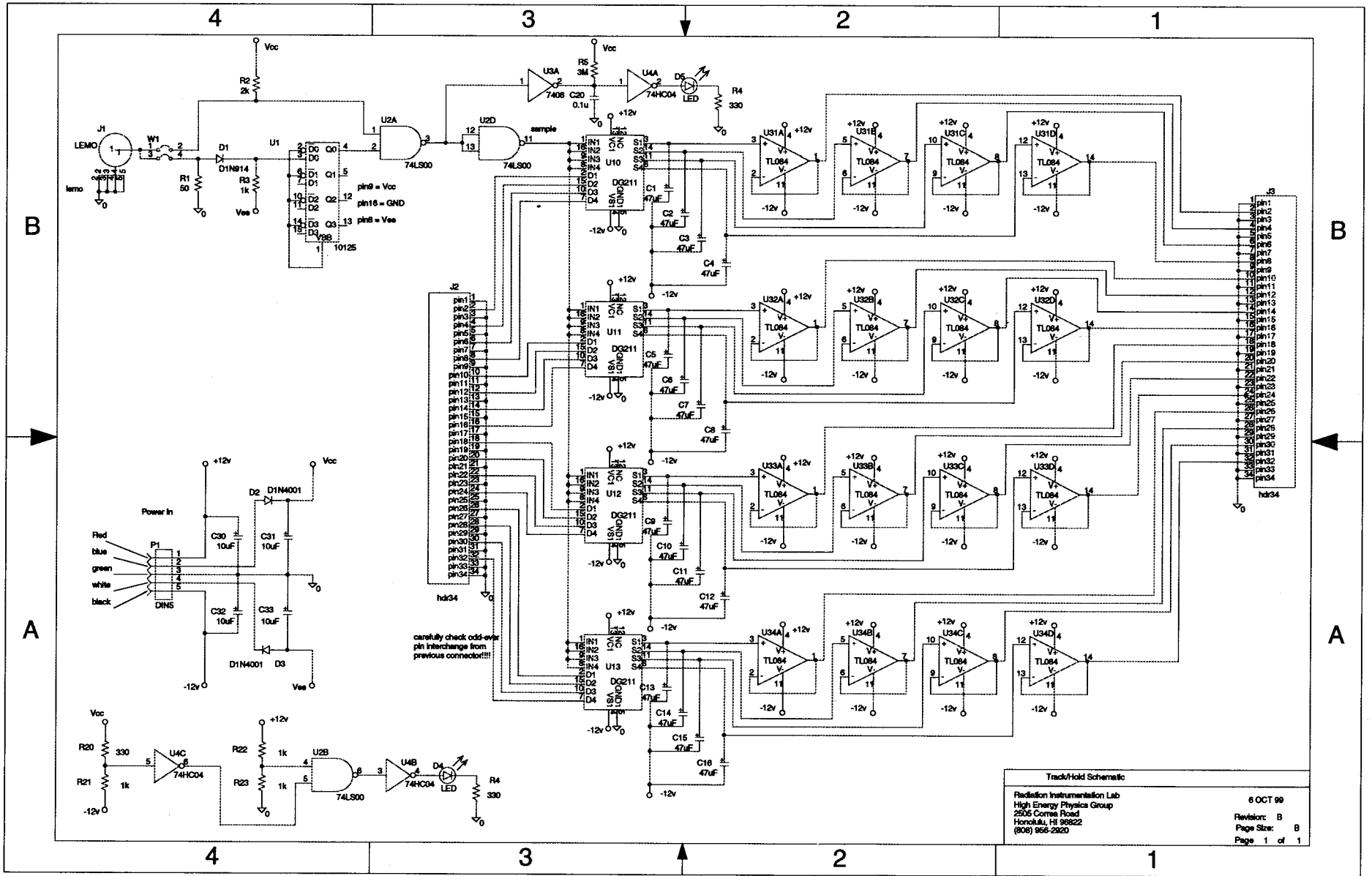
Track/Hold Schematic
Radiation Instrumentation Lab
High Energy Physics Group
2505 Correa Road
Honolulu, HI 96822
(808) 956-2920
6 OCT 99
Revision: B
Page Size: B
Page 1 of 1
carefully check odd-even pin interchange from previous connector!!!!
pin9 = Vcc
pin16 = GND
pin8 = Vee
sample
Power In
Red
blue
green
white
black
LEMO
J1
W1
D1
D1N914
U1
10125
R1 50
R2 2k
R3 1k
U2A
74LS00
U2D
74LS00
U3A
7408
R5 3M
C20 0.1u
U4A
74HC04
D5
LED
R4 330
U10
U11
U12
U13
DG211
C1 47uF
C2 47uF
C3 47uF
C4 47uF
C5 47uF
C6 47uF
C7 47uF
C8 47uF
C9 47uF
C10 47uF
C11 47uF
C12 47uF
C13 47uF
C14 47uF
C15 47uF
C16 47uF
U31A
U31B
U31C
U31D
U32A
U32B
U32C
U32D
U33A
U33B
U33C
U33D
U34A
U34B
U34C
U34D
TL084
J2
hdr34
J3
hdr34
P1
DIN5
C30 10uF
C31 10uF
C32 10uF
C33 10uF
D1N4001
D2
D3
R20 330
R21 1k
U4C
74HC04
R22 1k
R23 1k
U2B
74LS00
U4B
74HC04
D4
LED
R4 330